Volvo Construction Equipment
Building Tomorrow

DD25B

Volvo Double Drum Compactors 2.6 t / 5,775 lb 25 hp

360° visibility

With an optimally positioned sliding seat, angled drum mounts and a sloping hood design, the DD25B provides industry-leading, all-around visibility. Whether rolling forwards or in reverse, the operator has a clear view of the drum edges and surroundings – delivering precise compaction and improved safety.

Performance you can count on

Introducing the DD25B, a highly efficient double drum compactor designed to increase performance and reduce fuel consumption on small scale compaction projects. Featuring the new Volvo D1.7A engine, this machine meets the strict Stage IV/ Tier 4 Final emissions regulations without adding an exhaust after-treatment system. Experience increased machine performance and enhanced productivity with Volvo.

High performance

With Volvo's high frequency compaction, the DD25B can travel faster while still maintaining the correct impact spacing necessary for high productivity and a smooth finish. The frequency can be adjusted from 3300 vpm to 4000 vpm to cater for different applications.

Optimized for efficiency

The new Volvo D1.7A (18.5kW/25hp) engine effectively meets the stringent Stage IV/ Tier 4 Final emissions regulations without the cost or complexity of an exhaust after-treatment system. The optimized eccentric system ensures a powerful performance – equivalent to machines fitted with a bigger engine.

Pressurized water system

The DD25B boasts an industry-leading water tank capacity. A rust-proof, pressurized water system provides consistent flow to the front and rear drum surfaces – eliminating asphalt pick-up. Fine filters behind each of the eight spray nozzles minimize clogging and ensure correct fan spray coverage – providing ideal wetting of the drum surface.

Reduced fuel consumption

The Volvo D1.7A engine is perfectly matched to the DD25B's hydraulic system – delivering high performance and a 7% reduction in fuel consumption.

The Volvo experience

Engine compartment

For easy maintenance access, the hinged engine hood tilts forward – providing wide access to the engine and hydraulic components at ground level.

Water level indicator

The operator can easily monitor the water tank level from the seat.

Intermittent water spray

The DD25B boasts an industry-leading water tank capacity. The operator can adjust the time between water sprays to the drums to conserve water and reduce refilling downtime.

Optimized for efficiency

The new Volvo D1.7A engine delivers high performance while meeting the stringent Stage IV/ Tier 4 Final emissions regulations without an exhaust after-treatment system.

Urethane drum wipers

Front and rear drum wipers are made of urethane – increasing effectiveness and component lifetime as well as reducing maintenance requirements.

Auto start vibration

Vibration engages automatically when the FSR lever is moved out of neutral and disengages when the lever is put in the stop position. This eliminates the risk of accidental damage to the mat.

Reduced fuel consumption

The Volvo D1.7A engine is perfectly matched to the DD25B's hydraulic system – delivering high performance and a 7% reduction in fuel consumption.

360° visibility

With an optimally positioned sliding seat and a sloping engine hood design, the operator will experience industry-leading, all-around visibility.

High performance

With Volvo's high frequency compaction, the DD25B can travel faster while still maintaining the correct impact spacing necessary for high productivity and a smooth finish.

Quick removal of nozzles

Water nozzles can be quickly removed without the need for tools – increasing machine uptime and water system performance.

Maintenance-free bearings

Maintenance-free eccentric bearings are lubricated for life and built to tolerate high temperatures and rotation speeds.

Pressurized water system

A rust-proof, pressurized water system provides consistent flow to the drum surfaces – eliminating asphalt pick-up.

Machined drums

Machined drums with chamfered edges are perfectly round in order to produce a smooth, mark-free mat.

Maintain your productivity

Volvo machines are built to last. That's why all service points on the DD25B are easy to access for fast maintenance and reduced downtime. The lightweight engine hood opens effortlessly for daily inspection. Combined with Volvo's excellent service support, your DD25B will keep you rolling longer.

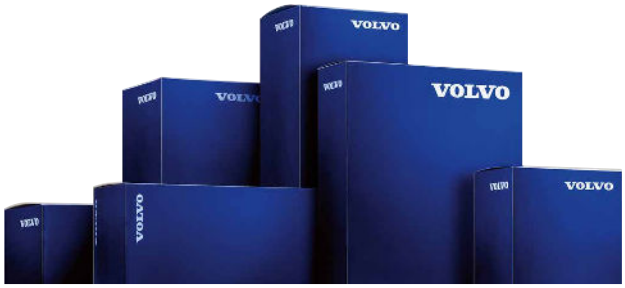

Easy-access engine compartment

The engine hood can be easily opened for daily maintenance and inspection. The hinged engine hood design is lightweight and tilts forward with the aid of two gas struts giving wide access to the engine and hydraulic components.

Dealer support comes standard

Your local Volvo dealer backs you and your operation with a ready supply of genuine Volvo parts that are perfectly matched to your machine. Your dealer is also ready to help you stay working with expert, trained service and support.

Specifications

Model				DD25B Narrow Drum		DD25B Wide Drum	
Machine weights (w/ ROPS)							
Operating weight		kg	lb	2 515	5,545	2 620	5,776
Weight @ front drum		kg	lb	1 211	2,670	1 270	2,800
Weight @ rear drum		kg	lb	1 304	2,875	1 360	2,998
Shipping weight		kg	lb	2 359	5,201	2 470	5,445
Drum							
Width		mm	in	1 000	39.4	1 200	47.2
Diameter		mm	in	700	27.5	700	27.5
Shell thickness		mm	in	13	0.51	13	0.51
Finish				Machined			
Vibration							
Frequency		Hz	vpm	55/66.7	3,300/4,000	55/66.7	3,300/4,000
Nominal amplitude		mm	in	0.54	0.0210	0.5	0.0197
Centrifugal force	high	kN	lb	37.5	8,430	40.6	9,127
	low	kN	lb	25.5	5,732	27.7	6,227
Propulsion							
Type				Closed-loop hydrostatic			
Drum drive				Radial piston			
Travel speed		km/h	mi/h	0 – 10.3	0 – 6.4	0 – 10.3	0 – 6.4
Engine							
Make / model				Engine Tier 4 Final - Volvo D1.7A			
Engine type				3-cylinder diesel			
Rated power @ installed speed		kW	hp	18.5 kW / 25 hp @2 200 r/min			
Electrical				12 volts, 70 A alternator			
Brakes							
Service				Hydrostatic			
Parking secondary				Spring-applied, hydraulic release on each drum			
Water system							
Type				Pressurized			
Nozzles				4 per drum			
Filtration				Inlet and nozzle filtration			
Drum wipers				Spring-loaded, self-adjusting urethane wipers			
Water tank capacity		l	gal	260	69	260	69
Miscellaneous							
Articulation angle			°	+ / - 30			
Oscillation angle			°	+ / - 10			
Inside turning radius (to drum edge)		mm	in	2 800	110	2 800	110
Fuel tank capacity		l	gal	40	10.6	40	10.6
Hydraulic oil capacity		l	gal	27	7.2	27	7.2
Gradeability (theoretical)			%	30			
Guaranteed Sound Level							
Operator's Ear, acc. to ISO 11203:2009			L_{pA} dB	87			
External, acc. to Directive 2000/14/EC			L_{WA} dB	106			

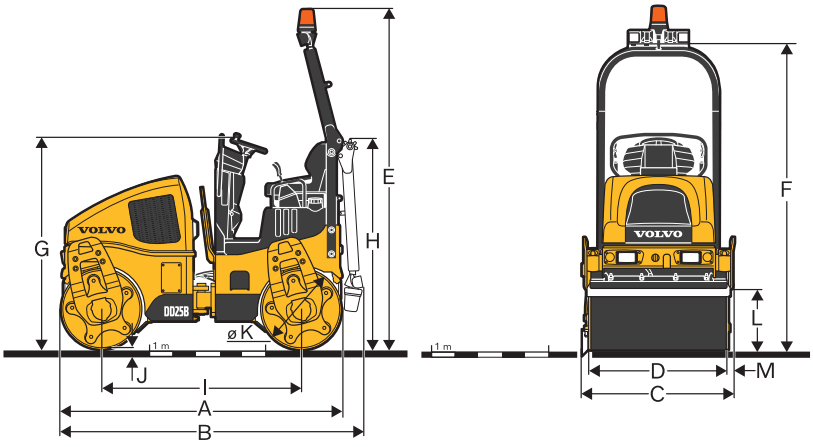

Dimensions	DD25B Narrow Drum		DD25B Wide Drum	
	mm	in	mm	in
A	2 420	95.3	2 420	95.3
B	2 540	100.0	2 540	100.0
C	1 090	42.9	1 290	50.8
D	1 000	39.4	1 200	47.2
E	2 955	116.3	2 955	116.3
F	2 650	104.3	2 650	104.3
G	1 870	73.6	1 870	73.6
H	2 020	79.5	2 020	79.5
I	1 720	67.7	1 720	67.7
J	13	0.5	13	0.5
K	700	27.6	700	27.6
L	490	19.3	490	19.3
M	45	1.8	45	1.8

Ref. No VCE2230009320/ English-22 / 2021.02 / COA / Volvo, North America Marketing

VOLVO

Volvo Construction Equipment

volvoce.com