Volvo Construction Equipment

DD30B, DD35B

Volvo Double Drum Compactors 3.1-3.7 t / 6,839-8,185 lb 49.6 hp

A passion for performance

At Volvo Construction Equipment, we're not just coming along for the ride. Developing products and services that raise productivity – we are confident we can lower costs and increase profits for customers around the globe. Part of the Volvo Group, we are passionate about innovative solutions to help you work smarter – not harder.

Helping you to do more

Doing more with less is a trademark of Volvo Construction Equipment. High productivity has long been married to low energy consumption, ease of use and durability. When it comes to lowering life-cycle costs, Volvo is in a class of its own.

Designed to fit your needs

There is a lot riding on creating solutions that are suited to the particular needs of different industry applications. Innovation often involves high technology – but it doesn't always have to. Some of our best ideas have been simple, based on a clear and deep understanding of our customers' working lives.

You learn a lot in 180 years

Over the years, Volvo has advanced solutions that have revolutionized the use of construction equipment. No other name speaks Safety louder than Volvo. Protecting operators, those around them and minimizing our environmental impact are traditional values that continue to shape our product design philosophy.

We're on your side

We back the Volvo brand with the best people. Volvo is truly a global enterprise, one that is on standby to support customers quickly and efficiently – wherever they are.

We have a passion for performance.

A strong, dedicated, capable dealer network

Our dealers are strategically located throughout North America to provide the equipment you need and the parts and service support you demand for a productive and profitable operation.

The strength of our dealer network is enhanced with extensive individualized product support training at our best-in-class Customer Center in Shippensburg and through hands-on training. Using a great Product Demonstration Center featuring a dedicated area for most commons applications, visitors operate equipment from our entire product line under a variety of simulated working conditions. This facility is in year-round use by our dealers and customers.

Building the best starts right here.

The products designed and manufactured by Volvo Construction Equipment have their beginnings at the most advanced Research & Design centers in the industry. Volvo CE machines are designed in 11 R&D centers and produced in 15 manufacturing facilities across the world.

The major R&D center and manufacturing plant in the Americas is located in Shippensburg, Pennsylvania. This facility has been in operation for over 30 years and – with its recently added 200,000 sq. ft. expansion – now covers 570,000 sq. ft. on an 80 acre campus. Dedicated work teams and highly advanced technologies and techniques using the Volvo Production System ensure continuous quality improvements, labor savings and cost control to reach the high quality that our customers have come to expect from Volvo.

Volvo Trucks

Renault Trucks

Mack Trucks

UD Trucks

Volvo Buses

Volvo Construction Equipment

Volvo Penta

Volvo Financial Services

Compact machine, big performance

Intuitive operation

Consistent with other Volvo T4F compactors, the easy-to-use side console enables you to fine-tune adjustments while compaction is underway.

MAKING THE GRADE

The TwinLock™ traction control and torque transfer system minimizes drum slippage for superior drum control at all speeds, and in both directions.

All angles in view

Roll worry-free with an optimally positioned sliding seat and sloping engine hood design, offering 360° visibility.

PRODUCTIVITY ON TAP

A rustproof, pressurized, and optional triple filtered water system provides consistent flow to the drum surfaces, reducing asphalt pick-up.

Consistent compaction

Prevent over-compaction with the auto-vibration system, which automatically engages vibration when the machine reaches approximately 2.4 km/h (1.5 mi/h), and disengages when the speed drops below 1.9 km/h (1.2 mi/h).

POWER TO PERFORM

The new Tier 4 Final-compliant engine delivers high performance, without the need to stop for regeneration.

Transportability

For ease of transportation, the foldable ROPS option can be easily collapsed without the need for special tools.

Roll with the experts

Built on decades of engineering excellence, the machined drums produce a smooth, mark-free mat thanks to their chamfered and rounded edges.

Comfortable and convenient

Stay comfortable in the updated operator's platform, offering a conveniently located cup holder and power port.

Simple serviceability

For ease of maintenance, the hinged engine hood tilts forward, providing ground-level access to the engine and hydraulic components.

Drive your costs down

Cut fuel consumption with the auto-idle option, which reduces the engine speed when controls are inactive for over sixty seconds.

Specifications

Model			DD30B		DD35B	
Machine weights (w/ ROPS)						
Operating weight	kg	lb	3,102	6,839	3,713	8,185
Weight @ front drum	kg	lb	1,411	3,110	1,783	3,930
Weight @ rear drum	kg	lb	1,695	3,729	1,930	4,255
Shipping weight	kg	lb	3,000	6,615	3,608	7,955
Drum						
Width	mm	in	1,250	49.2	1,375	54.1
Diameter	mm	in	736	29	736	29
Shell thickness	mm	in	14	.55	16	.63
Finish			Machined, chamfered edge			
Vibration						
Frequency	Hz	vpm	66.7	4,000	66.7	4,000
Nominal amplitude	mm	in	.38	.015	.33	.013
Centrifugal force	kN	lb	33	7,500	33	7,500
Propulsion						
Type			Closed-loop, hydrostatic, parallel circuit		Closed-loop, hydrostatic, TwinLock	
Drum drive			Pump: axial piston; Motor: radial piston, low speed, high torque			
Travel speed	km/h	mi/h	0 - 10.2	0 - 6.4	0 - 10.2	0 - 6.4
Engine						
Make / model			Kubota D1803-CR-TE4B			
Engine type			3-cylinder diesel			
Rated power @ 2,700 r/min	kW	hp	37	49.6	37	49.6
Electrical			12 volts DC, negative ground; 60 A alternator			
Brakes						
Service			Dynamic hydrostatic through propulsion system			
Parking secondary			Spring-applied, hydraulically released (SAHR) on each drum drive			
Water system						
Type			Pressurized			
Nozzles			5 per drum			
Filtration			80 mesh in-line with 100 mesh @ nozzles			
Drum wipers			Spring-loaded, self-adjusting, styrene wipers			
Water tank capacity	l	gal	299	79	299	79
Miscellaneous						
Articulation angle	°		+ / - 30°			
Oscillation angle	°		+ / - 10°			
Inside turning radius (to drum edge)	mm	in	2,592	102	2,532	99.7
Fuel tank capacity	l	gal	66	17.4	66	17.4
Hydraulic oil capacity	l	gal	85	22.4	85	22.4
Gradeability (theoretical)	%		46		37	
Guaranteed Sound Level						
Operator's Ear, acc. to ISO 11203:2009	LpA dB(A)		88			
External, acc. to Directive 2000/14/EC	LwA dB(A)		106			

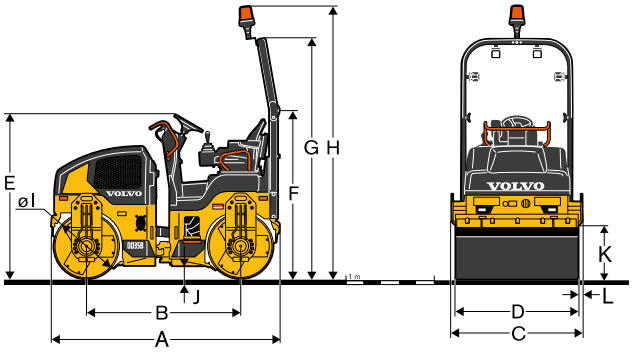

Dimensions	DD30B		DD35B	
	mm	in	mm	in
A	2,566	101.0	2,566	101.0
B	2,661	104.8	2,661	104.8
C	1,363	53.7	1,485	58.5
D	1,250	49.2	1,375	54.1
E	2,662	104.8	2,664	104.9
F	2,527	99.5	2,529	99.6
G	1,826	71.9	1,828	72.0
H	1,975	77.8	1,977	77.8
I	1,725	67.9	1,725	67.9
J	14	0.6	16	0.6
K	736	29.0	740	29.1
L	606	23.9	608	23.9
M	57	2.2	57	2.2

Equipment

STANDARD EQUIPMENT	DD30B	DD35B
Engine		
Battery Disconnect Switch	•	•
US EPA T4F compliant engine	•	•
Operator environment		
Open ROPS	•	•
Sliding operator seat	•	•
Seat switch with timer delay	•	•
Cup holder	•	•
Anti-slip floor	•	•
Seat belt	•	•
Seat belt alarm	•	•
12 volt power point	•	•
Vibration and drum system		
Single speed vibration	•	•
Selectable vibration: front, both	•	•
TwinLock™ anti-slip system	•	•
Electrics and electronics		
Easily accessible fuses and relays	•	•
Permanent fuel level display	•	•
Permanent water level indicator	•	•
Information display:	•	•
-Fluid temperatures	•	•
-Engine speed	•	•
-Vehicle speed	•	•
Emergency stop button	•	•
Other		
Hand servicable spray nozzles	•	•
Adjustable spray flow rate	•	•
“Racetrack” maintenance decal	•	•

OPTIONAL EQUIPMENT	DD30B	DD35B
Engine		
Auto Idle	•	•
Operator environment		
Foldable arch-ROPS	•	•
Open ROPS/FOPS canopy	•	•
Mirror	•	•
Steering knob	•	•
Vandal cover	•	•
Vibration and drum system		
Inside scraper- styrene	•	•
Inside scraper- urethane	•	•
Edge compactor	•	•
Electrics and electronics		
Work lights	•	•
Strobe lights	•	•
Rotating Beacon	•	•
Backup alarm	•	•
Anti-theft	•	•
Engine oil pressure display	•	•
Caretrack	•	•
Water system		
Cocoa mats installation	•	•
Water Strainer	•	•
Other		
Lifetime Frame Guarantee	•	•
Bio-degradable oil	•	•
Special Paint	•	•
Hydraulic test ports	•	•
ROPS ship loose	•	•
License Plate	•	•

Ref. No 20053833_B / Engjish-22 / 2018.08 / COA / Volvo, Global Marketing

VOLVO

Volvo Construction Equipment

www.volvoce.com